User manual

Blueair

SCAN FOR SUPPORT

2-in-1 Purify + Humidify

DH3i

Contents

Please read this user manual carefully and keep it for future reference.
The latest version of this user manual can be found on www.blueair.com.

Safety Information	3
Product Introduction	6
Get Started	7
Product Map	8
Humidification Module Map	9
Device Controls	10
AQI Indicator	12
Maintenance Information	13
Moving the Device	25
Troubleshooting	26
Regulatory Information	28

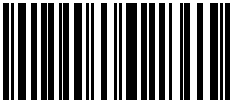

Safety Information



READ AND SAVE THESE INSTRUCTIONS.
Blueair air purifiers are electrical appliances for indoor use only. Take the necessary precautions to reduce the risk of fire, electric shock, or injury.
WARNING: RISK OF ELECTRIC SHOCK – These servicing instructions are for use by qualified personnel only. To reduce the risk of electric shock, do not perform any service other than that contained in the operating instructions unless you are qualified to do so.

This appliance is not intended for use by persons (including children) with reduced physical, sensory or mental capabilities, or lack of experience and knowledge, unless they have been given supervision or instruction concerning use of the appliance by a person responsible for their safety.

To reduce the risk of fire, electric shock, or injury, only use manufacturer-recommended replacement parts.

Supervise children to ensure that they do not play with the appliance.

Cleaning and user maintenance shall not be done by children without supervision.

Always disconnect the appliance from the power supply before maintenance.

If your Blueair appliance is found to be defective, we will replace it with the same or a similar model at no cost, per the warranty terms.

Ensure the power cord and plug are not at risk of getting damaged. To avoid hazard, damaged power cords or plugs must be replaced by the manufacturer.

If the appliance is damaged or malfunctions, turn it off, disconnect it from the power supply and contact Blueair.

The power plug must be firmly inserted in the power outlet.

Overfilling or cleaning the appliance without unplugging it may cause electric shock.

Do not run the power cord under carpeting, furniture, or appliances, or cover it with rugs. Keep the cord away from traffic areas to prevent tripping.

Use the provided adapter to plug the appliance directly and firmly into an appropriate electrical outlet. If the plug does not fit, do not alter the adapter in any way. Contact qualified personnel to install the correct outlet.

Do not use an extension cord with this appliance.

Safety Information

Do not use the included adapter for anything else but the appliance.

Do not allow objects to enter or block the evaporative outlet as this can cause electric shock or damage the appliance.

Do not place any objects on top of or directly against the appliance.

Do not sit on, stand, climb onto, or hang from the appliance.

Keep the appliance, including the adapter, at a safe distance from heated surfaces and open fire.

When plugged in, keep the appliance away from standing water such as bathtubs and ensure the area around the appliance is dry before plugging in the appliance.

Keep the appliance and adapter away from chemicals such as pesticides and deodorants.

Place the appliance on the floor.

Do not use the appliance outdoors.

Always turn off and unplug the appliance before moving it, refilling water, cleaning, or performing maintenance.

Never clean with gasoline, chemical solvents, or corrosive materials as these agents may damage the appliance.

Only fill the water tank with clean water, do not use any other liquids.

WARNING: Skin or eye damage may result from directly viewing the light produced by the UV lamp located inside the pump of this apparatus.

This appliance contains a UV-C emitter.

Regular cleaning of the water tank is essential to prevent the formation of scale.

The UV lamp is not allowed to be replaced by user.

Safety Information

Unintended use of the appliance or damage to the housing may result in the escape of dangerous UV-C radiation. UV-C radiation may, even in little doses, cause harm to the eyes and skin.

Appliances that are obviously damaged must not be operated.

Maintain a distance of at least 4 inches (10 cm) between the air purifier and any other object to ensure proper air circulation.

Regulatory Information

This equipment has been tested and found to comply with the limits for a Class B digital device, pursuant to Part 15 of the FCC Rules. These limits are designed to provide reasonable protection against harmful interference in a residential installation. This equipment generates, uses and can radiate radio frequency energy and, if not installed and used in accordance with the instructions, may cause harmful interference to radio communications.

However, there is no guarantee that interference will not occur in a particular installation. If this equipment does cause harmful interference to radio or television reception, which can be determined by turning the equipment off and on, the user is encouraged to try to correct the interference by one or more of the following measures:

Reorient or relocate the receiving antenna.

Increase the separation between the equipment and receiver.

Connect the equipment into an outlet on a circuit different from that to which the receiver is connected.

Consult the dealer or an experienced radio/TV technician for help.

This device complies with Part 15 of the FCC Rules. Operation is subject to the following two conditions:

This device may not cause harmful interference.

This device must accept any interference received, including interference that may cause undesired operation.

This Class B digital apparatus complies with Canadian ICES-003.

This device contains licence-exempt transmitter(s)/receiver(s) that comply with Innovation, Science and Economic Development Canada's license-exempt RSS(s). Operation is subject to the following two conditions: (1) This device may not cause interference, and (2) This device must accept any interference, including interference that may cause undesired operation of the device.

FCC/ISED RF Exposure Information: This equipment should be installed and operated with a minimum distance of 8 inches (20 cm) between the radiator and your body.This appliance is conformity to the applicable provisions of applicable US Federal requirements, including 21 CFR, Chapter 1, Subchapter J, Radiological Health.

Product Specifications

	2-in-1 Purify + Humidify DH3i
Model number	6331411000
Rated Voltage	120V 60 Hz
Rated power input	48 W
Room size	28m² (4.8 ACH) 301 sq ft (4.8 ACH)
*Smoke CADR	194cfm(330m³/h)
*Dust CADR	194cfm(330m³/h)
*Pollen CADR	194cfm(330m³/h)

*Based on AHAM testing standards

Product Introduction

Product name	Model number
2-in-1 Purify + Humidify	6331411000

Blueair 2-in-1 Purify + Humidify is a multifunctional air purifier with built-in humidification function that can enhance indoor air quality by eliminating pollutants from the air while offering humidification.

The 2-in-1 Purify + Humidify models come with integrated controls and built-in sensors. The model has a digital display showing particulate data (PM2.5) and room humidity. To adjust the settings of your product, you can either use the control panel on top of the device or the Blueair app. The Blueair app grants access to additional features and functions.

Recommendations for best performance

• Ensure that the size of the room where 2-in-1 Purify + Humidify is used does not exceed the recommended room capacity.
• Place 2-in-1 Purify + Humidify in an area where air can freely flow in and out, ensuring proper circulation.
• Keep the doors and windows closed while 2-in-1 Purify + Humidify is in operation.
• Clean the air quality sensor monthly to remove dust and other debris.
• Replace the filter when the filter replacement indicator appears on the control panel.
• Replace the wick filter when the wick replacement indicator appears on the control panel.
• Clean the pre-filter monthly
• Refer to the maintenance instructions in this user manual for proper care.

Getting Started

Step 1
Open the back and take out the filters. Remove the plastic from the filters.

Step 2
Put the filters back in the air purifier. Close the hatch.*

Step 3
Plug the power cable into a wall outlet.

Step 4
Press the ON/Standby button to turn 2-in-1 Purify + Humidify on.

*See section "Changing the Filter" for more information.

Connect to the Blueair app

The app offers additional features like personalized humidity levels, smart scheduling, and more. Connecting to the Blueair app offers you additional features like personalized humidity level, smart scheduling and water level & filter notifications



First time connecting tips

Turn on your device. Press and hold the auto mode button for 5 seconds to prepare the air purifier for pairing. Once the Wi-Fi indicator is blinking, it is ready to be paired with your app.

Make sure you are using a visible Wi-Fi network. VPN (Virtual Private Network) should be deactivated while using the Blueair app.

Bluetooth is required for first time pairing. Turn your phone's bluetooth on and keep your phone within 3 feet (1 meter) of the device for initial pairing.

This device can only connect to 2.4 GHz Wi-Fi. If you are using a dualband Wi-Fi router, make sure to select 2.4GHz.

Keep your device within 15 feet (4,5 meters) of your Wi-Fi router when connecting the product for the first time.

Product Map

A. User interface display
B. Boosted purification air outlet
C. Control panel
D. Air quality indicator
E. Handle, right side
F. Air inlet, right side
G. Water tank
H. Air inlet, left side
I. Filter and pre-filter, right side
J. Filter and pre-filter, left side
K. Filter and pre-filter, rear
L. Air inlet, rear
M. Blueair tag
N. Handle, left side
O. Adapter
P. Air Quality Sensor
Q. Humidification module (Details on next page)

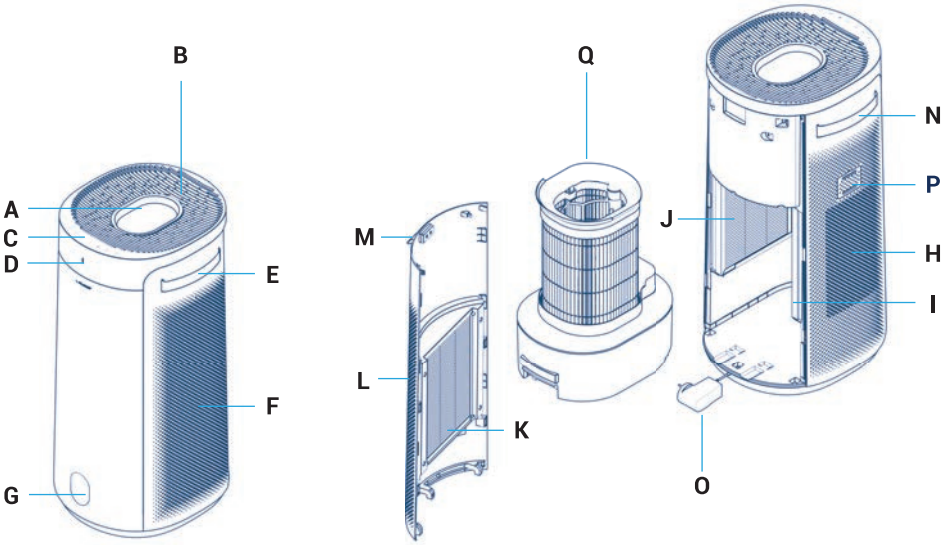

Humidification Module Map

Q. Humidification module
R. Top of wick frame (Reusable, do not dispose)
S. Wick filter
T. Wick frame (Reusable, do not dispose)
U. Water pump module
V. Water pump pre-filter
W. Water tank

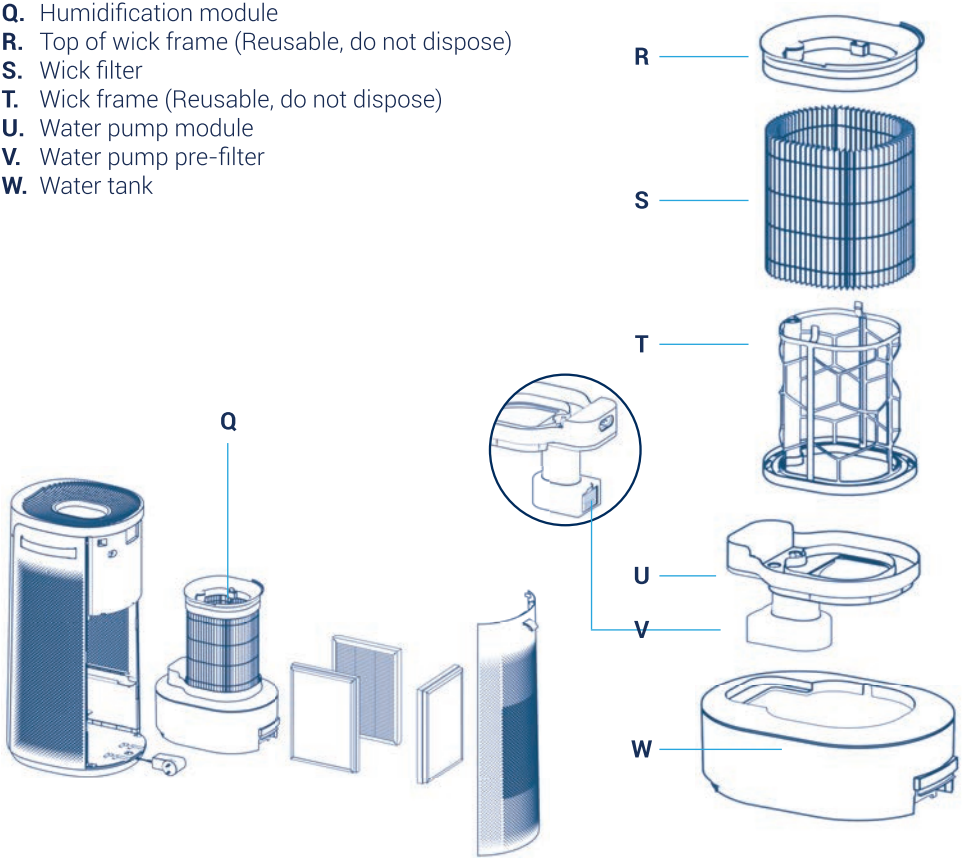

Control and Display

User Interface Display*

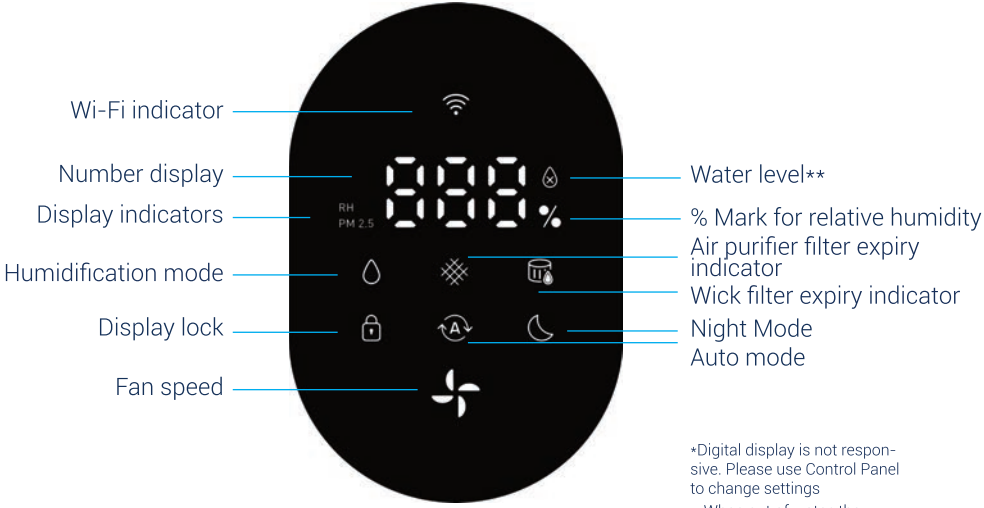

*Digital display is not responsive. Please use Control Panel to change settings

**When out of water, the indicator light is solid.When water level exceeds 95%, the light flashes.

Control Panel Icons



Device Controls

	On/standby	Short press(1s) to turn the device on or go into standby mode. Long press(5s) until display blinks to enable display lock. Long press(5s) then release to disable display lock. Then the display blinks. Long press(15s) until display blinks twice to enable factory reset. Then factory reset will start in 10 seconds.
	Brightness setting	Change the brightness of the display by cycling through the brightness levels (level 0-6)
	Night mode	Press to turn the night mode on. Then device goes to the lowest fan speed and dims the brightness to lowest level in 10 seconds. Press the button twice to deactivate the night mode. The night mode indicator will turn off.
	Information toggle	Use the toggle buttons to alternate between Relative Humidity and PM 2.5 level in the display.
	Manual fan speed	Short press to adjust the fan speed 0-1-2-3-4 manually. Long press (15s) on the manual fan speed button until display blinks to reset the filter replacement expiry indicator.

	Auto mode	When humidification is disabled, fan speed automatically adjust based on your indoor PM2.5 level to ensure optimal air quality. When humidification is enabled, fan speed automatically adjusted based on both your indoor PM 2.5 level to ensure optimal air quality and relative humidity level to reach the target humidity %. Long press (5s) until display blinks to enable Wi-Fi. Long press (15s) until display blinks twice to reset/disable Wi-Fi.
	Humidification mode	Short press(1s) to turn On/Off the humidification function. Long press to (15s) until display blinks to reset wick filter expiry indicator.

The Auto-Dry feature

This device defaults to Auto-Dry mode.

When the function is working, the icon in the UI interface will flash.

Auto-Dry activates in two scenarios:

It starts automatically when out of water, and stops upon pressing the .

It turns on when the fan speed is set to 0, and stops with any button press except & .

Disable the Auto-Dry feature:

Use the app to control automatic activation.

AQI Indicator

The 2-in-1 Purify + Humidify air purifier / humidifier has a PM2.5 particle sensor to measure the fine air particles (PM 2.5) in the room. The AQI indicator displays the air quality status in five colors, from excellent (blue) to very polluted (red).
In humidifier mode when the water tank is low on water the AQI indicator will flash, reminding you to refill.



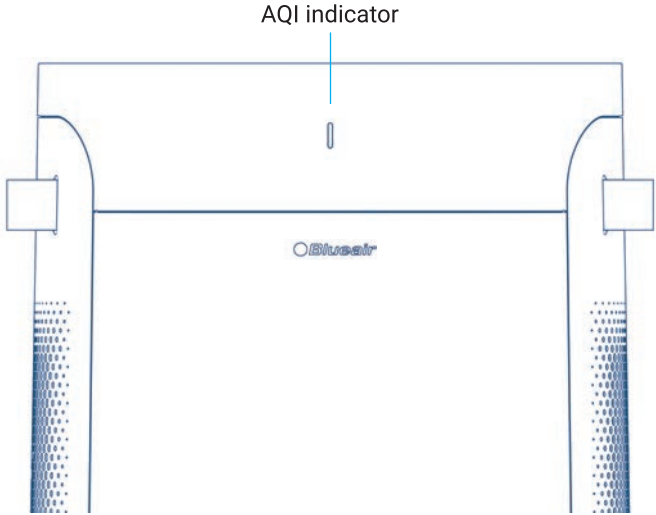

Important! Turn the device off and disconnect it from the power supply before maintenance.



Purifier filter replacement expiry indicator



Wick filter expiry indicator

Changing the purifier filter

The 2-in-1 Purify + Humidify air purifier / humidifier calculates the remaining lifetime of the purifier filter based on actual usage and indoor pollution levels. When it is time to change the purifier filter, the purifier filter replacement indicator will appear red on the control panel on top of the device. The recommended time for purifier filter change is 6-9 months. The recommended time for wick filter change is 6 months.

Use original Blueair filters compatible with your device to ensure optimal performance. The serial number and model name can be found on the face of the air channel cover. Order new filters from www.blueair.com or sign up for the Blueair filter subscription program.

Important! Always turn off and disconnect the appliance from the power supply before filling water, changing filters, cleaning, or carrying out maintenance procedures.

Long press (15s) on the manual fan speed button to reset the filter indicator after changing the filter. Long press (15s) on the humidify button to reset the wick filter indicator after changing the wick.

Maintenance Information

Changing air purifier filter

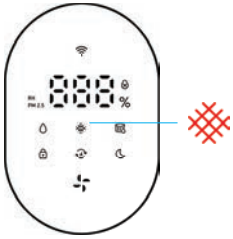

Important! Turn 2-in-1 Purify + Humidify off and disconnect it from the power supply before maintenance.

When your filter replacement indicator light turns red, it's time to change the air purifier filter. This will occur after 6-9 months of operation, depending on usage.

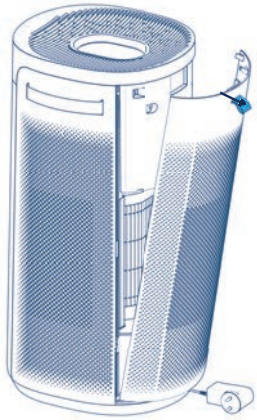

Step 1
Open the filter door by pulling the Blueair Tag.

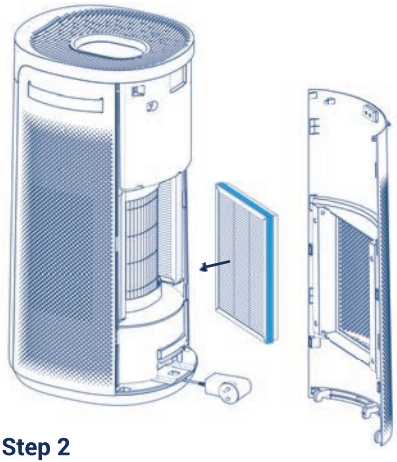

Step 2
Pull the filter out of the filter door.

Maintenance Information

Changing Air Purifier Filter

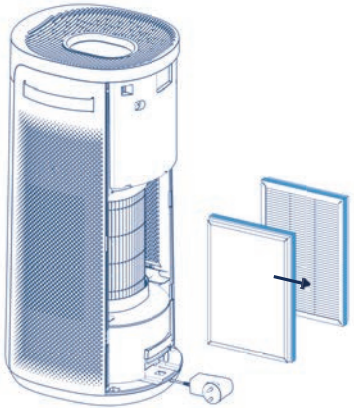

Step 3
Remove the two filters on the side by sliding them out.

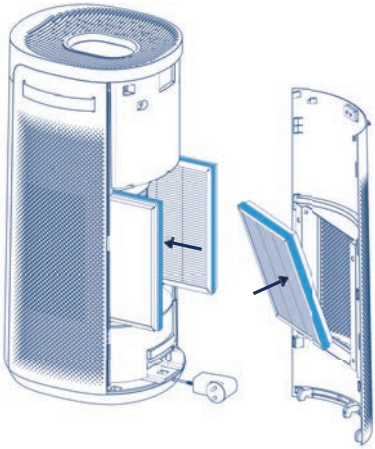

Step 4
Replace the new side and back filters appropriately, following the filter direction arrows on the filters.

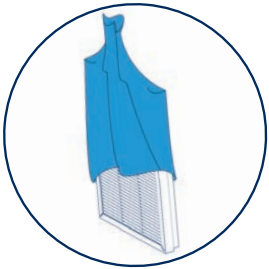

Important! Remove the plastic around the new filter.

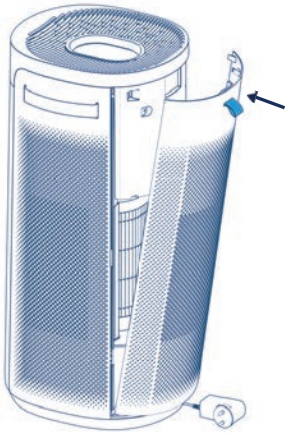

Step 5
Close the filter door.



Step 6
To reset the filter lifetime, press the Fan button for 15 seconds.

Maintenance Information

Changing the wick filter

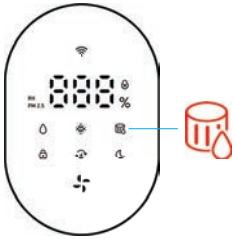

Important! Turn 2-in-1 Purify + Humidify off and disconnect it from the power supply before maintenance.

When your humidifier's wick filter indicator light turns red, it's time to change the wick filter. This will occur after 6 months of operation, depending on usage.

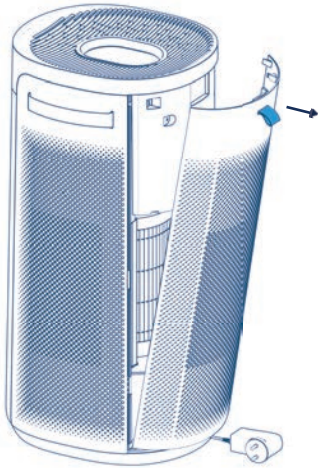

Step 1
Open the filter door by pulling the Blueair Tag.

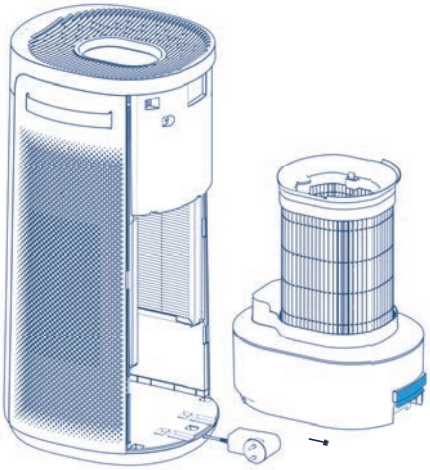

Step 2
Gently pull the water handle up to release the humidification module and slide it out.

Maintenance Information

Changing the wick filter

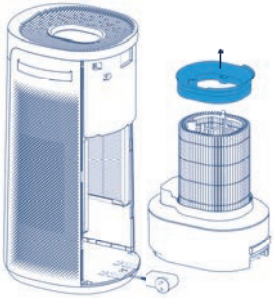

Step 3
Hold the buckle on each side to release the wick cover, then lift the wick frame cover off the reusable filter frame.

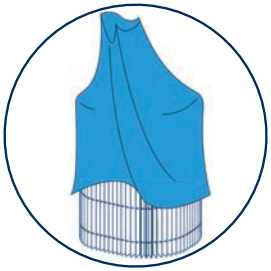

Important! Remove the plastic around the new wick filter.

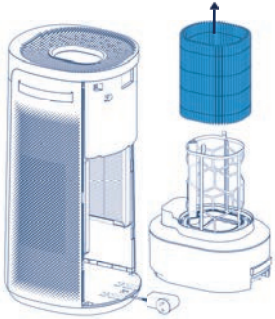

Step 4
Lift the wick filter off the reusable filter frame.

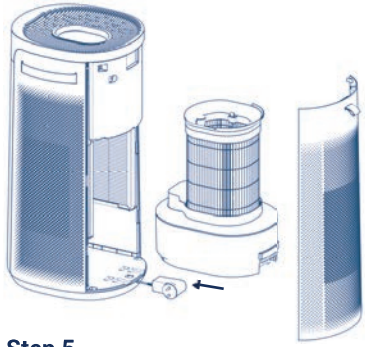

Step 5
Replace the new wick by inserting it back onto the reusable filter frame.Slide the humidification module back and close the filter door.

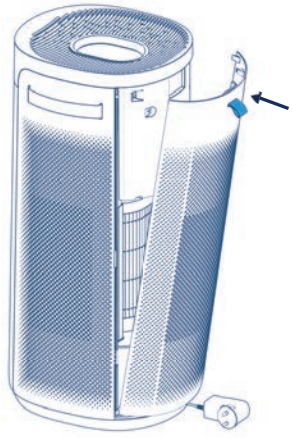

Step 6
Close the filter door.



Step 7
To reset the filter lifetime, press the Humidification icon for 15 seconds.

Maintenance Information

Changing the water pump pre-filter

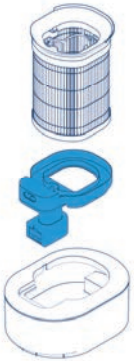

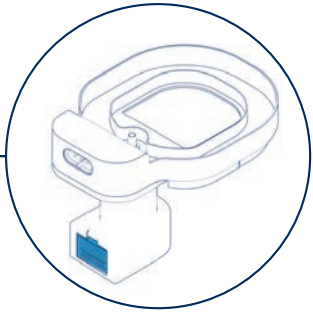

Step 1
Remove the pump from the humidification module and locate the pre-filter in the base.

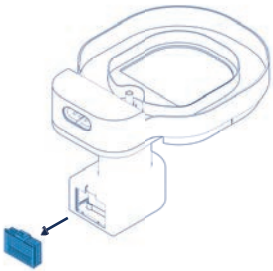

Step 2
Gently remove the pre-filter cartridge.

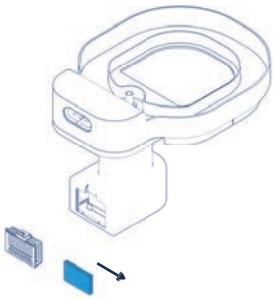

Step 3
Remove and replace the filter inside the cartridge. Reassemble by following the steps in reverse.

Maintenance Information

Filling + Refilling

Note: The 2-in-1 Purify + Humidify water tank and wick should be cleaned weekly to ensure optimal performance.

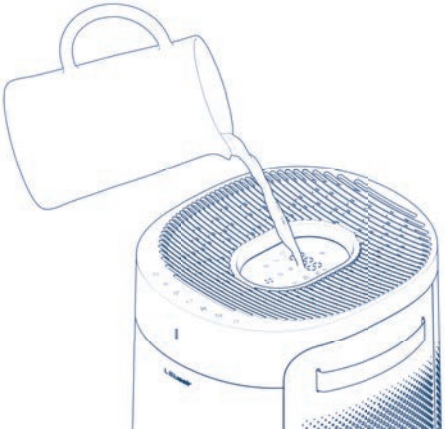

Option 1: Top Pour (recommended)

Before filling the water from the top, ensure the device is in standby mode.

Carefully pour water straight down onto the waterproof display.

Note: Do not fill past the max fill line printed on the water tank.

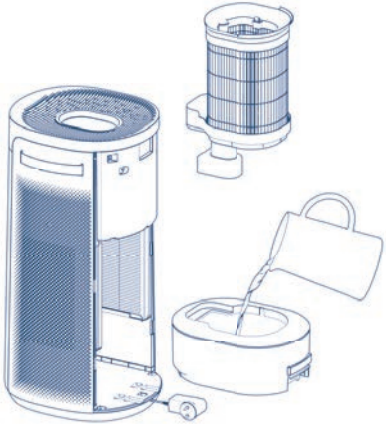

Option 2: Tank Fill

Open the back and take out the humidification model. Lift up the wick and pour water into the tank.

Note: Do not fill past the max fill line printed on the water tank.

Maintenance Information

To keep your 2-in-1 Purify + Humidify air purifier in optimal performance, regular maintenance is essential. Please follow these recommendations when cleaning your device.

General

• Disconnect the device from the power supply before maintenance.
• Do not allow foreign objects to enter the air inlets or air outlets. This may cause electric shock or damage the device.
• Never clean with gasoline, chemical solvents or corrosive materials as these agents may damage the device.
• Make sure the device is completely dry before connecting it to a power supply.
• Do not wash the air purifier filter, it's not washable or reusable.

Cleaning

• Wipe the exterior of the device with a soft, clean, damp cloth.
• Open the filter door and clean the inside of the door with a soft, clean, damp cloth.
• Vacuum the air inlets with a soft brush attachment (not included).
• Check the power cable and power plug for wear or damages.
• Vacuum the air purifier pre-filters with a soft brush (not included).
• Clean the sensor when changing the filter*.
• Water Tank: Clean the water tank using a mild detergent. Wipe the water tank dry before refilling and reassembling.
• Wick Filter: Soak with mild or acid cleanser. 20g citric acid for every 1L of water for 1 hour. Rinse well under running tap water.
• Water Pump Pre-filter: rinse with water

*See section "Clean the air purifier pre-filters" and "Air quality sensor" for more information.

Maintenance Information

Clean air purifier pre-filters

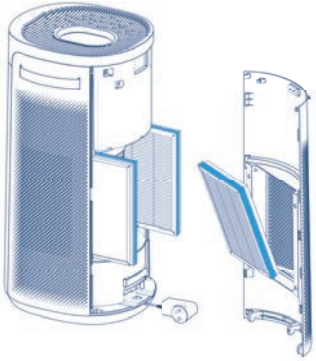

Step 1
Put the side and back filters aside to clean the pre-filters.

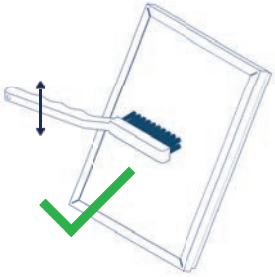

Step 2
Brush the filters clean on the smooth side.

Step 3
Put the filters back properly and close the filter door.

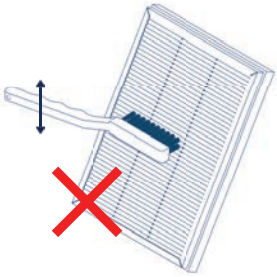

Important! Do not brush the filter on the folded filter paper side.

Maintenance Information

Air quality sensor

Important! Do not use your fingers or any other sharp objects to clean inside the sensor inlets.

The inlets for the air quality sensor are located on the left side of the air purifier. Clean the inlets and the sensor when changing the filter.

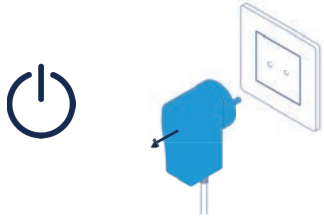

Step 1:

Turn the device off and unplug the cord.

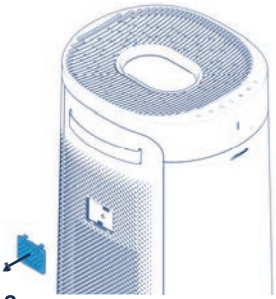

Step 2:

Remove the cover of the air quality sensor.

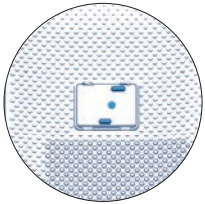

Step 3:

Gently vacuum the inlets with a soft brush attachment(not included) and clean the sensor with a cotton swab.

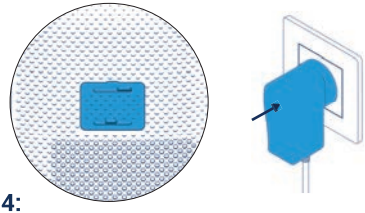

Step 4:

Close the cover and plug in the cord

Moving the Device

Important! Unplug the device before moving it.

Make sure that the filter door is securely closed.

2-in-1 Purify + Humidify has handles that makes it easier to move. Follow the instructions when moving your device.

Step 1:
Grab the handles firmly and pull them out.

Step 2:
Lift the device straight up using both hands.

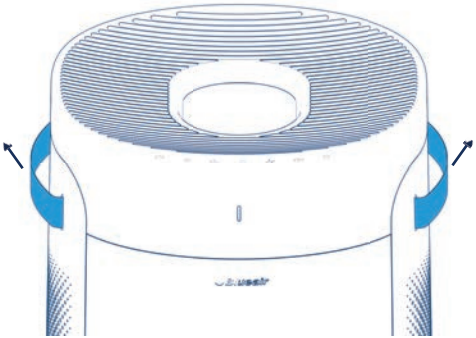

Troubleshooting

Issue	Potential cause	Try this
My air purifier is making too much noise.	Air purifiers that are set on a high-speed level produce more noise because they function at faster rates.	Set a lower fan speed. The air purifier should be quieter.
	The plastic sealing is still on the filter.	Make sure that the plastic cover is removed from the filter.
	If the filter is too dirty and clogged the air purifier will not get sufficient airflow which may result in increased noise levels.	Unplug your air purifier and gently vacuum the back inlets. Replace the filter when the Filter replacement indicator turns red.
I cannot connect my device	The air purifier is too far from your phone and router during the setup.	1. Ensure that your phone, air purifier and Wi-Fi router are in the same room and in close distance during initial set up, within 15 feet (5 meter). Once you have successfully paired your air purifier you can place it at your desired location. 2. Make sure that your air purifier is plugged in and powered on.
	The Blueair app is not up to date.	Download the latest Blueair app version from the App store.
	The router is not on or has no connection. The router is not using a standard connection.	Ensure the following before trying to connect your product again: 1. Internet is currently running. 2. You are using a 2.4 Ghz network. 3. Deactivate VPN.
	Bluetooth is deactivated.	Ensure Bluetooth is enabled in your smartphone's settings.
My device has lost connection.	Temporary Wi-Fi disturbances. New Wi-Fi settings or router	If your air purifier does not re-connect by itself after a few minutes: 1. Open the Blueair app. 2. Select your air purifier and go to Product settings. 3. Delete the air purifier. 4. Go back to the home screen and select “Connect Product". Follow the connection instructions.

Issue	Potential cause	Try this
There is no visible mist.	This humidifier uses evaporative technology which is mist-free and more hygienic.	
The humidifier has stopped running.	The humidifier has run out of water in the tank. The relative humidity in room has been reached the set humidify target.	Add more water to tank. To increase set humidify target.
The area around the humidifier is damp or wet from condensation.	Make sure the water tank is properly in place.	When replacing the water tank, wipe off excess water from the water tank.
The humidifier has turned back on after I turned it off.	5 minutes after turning off or water tank is empty, humidifier enters Auto Dry Mode. See page 8.	Allow the unit to run through Auto Dry Mode cycle to maintain a clean environment. Exit through APP or selecting the off button again.
Visible residue or discolor on the humidifer or wick filter.	The humidifier is safe to use with tap water. Water impurities are captured in the filter so visible residue is normal & shows correct operation.	See maintenance and cleaning instructions on page 26.
The humidity level isn't changing in my room.	External factors such as open window are having an impact or the room is larger than recommended area.	Ensure the device in a suitable area of recommended area or less with doors and windows closed.

For more information and troubleshooting tips, please check the support page on **www.blueair.com**



www.blueair.com

Blueair Inc.
125 S Clark,
Suite 2000,
Chicago, IL, 60603 USA